# 17 ROBINSON ROAD
## MORGANVILLE, NJ

# SPECIFICATIONS:

## DIVISION 1 – GENERAL

A. CONTRACTOR(S) SHALL COMPLY WITH ALL APPLICABLE CODES, LAWS, ORDINANCES, RULES AND REGULATIONS INCLUDING ALL STATE AND LOCAL MUNICIPALITIES HAVING JURISDICTION, INCLUDING THE 2015 NJ EDITION OF THE INTERNATIONAL RESIDENTIAL CODE (IRC), THE 2015 INTERNATIONAL MECHANICAL CODE, THE 2015 NATIONAL STANDARD PLUMBING CODE & THE 2014 NATIONAL ELECTRICAL CODE (NEC).

B. CONTRACTOR(S) SHALL BE RESPONSIBLE FOR ALL MATERIALS AND METHODS OF CONSTRUCTION, WHETHER IT BE THEIR OWN OR THAT OF THEIR EMPLOYEES, OR SUBCONTRACTORS. FURNISH ALL LABOR AND MATERIALS WHETHER INDICATED, OR NOT, TO COMPLETE THE WORK AS SHOWN.

C. ARCHITECT IS NOT RESPONSIBLE FOR ANY CHANGES MADE WHICH DEVIATE FROM THE DRAWINGS AND/OR THE SPECIFICATIONS, WHETHER INITIATED BY THE OWNER, CONTRACTOR, OR BOTH UNLESS AGREED UPON BY THE ARCHITECT IN WRITING. VERBAL RESOLUTIONS ARE NOT BINDING.

D. ANY ADDENDA OR MODIFICATIONS ISSUED BY THE ARCHITECT SHALL BECOME IMMEDIATELY INCORPORATED INTO THE WORK.

E. IF THE CONTRACTOR PROPOSES A SUBSTITUTION FOR ANY OF THE MATERIALS OR EQUIPMENT SPECIFIED HEREIN, THE CONTRACTOR SHALL BE RESPONSIBLE FOR FURNISHING SUFFICIENT INFORMATION TO DETERMINE IF THE SUBSTITUTE IS ACCEPTABLE AND EQUAL TO THE SPECIFIED ITEM. THE ARCHITECT SHALL DETERMINE IF AN ITEM IS ACCEPTABLE AND EQUAL, HOWEVER, THE CONTRACTOR SHALL BE SOLELY RESPONSIBLE FOR THE PERFORMANCE OF THE ITEM. REJECTED ITEMS SHALL NOT BE USED UNDER ANY CIRCUMSTANCES.

F. CONTRACTOR(S) SHALL VERIFY ALL CONDITIONS AND DIMENSIONS IN THE FIELD AND SHALL NOTIFY THE ARCHITECT OF ANY DISCREPANCIES BETWEEN ACTUAL FIELD CONDITIONS AND THOSE SHOWN ON THE DRAWINGS. CONTRACTOR IS RESPONSIBLE FOR THE COMPLETE LAYOUT OF THE WORK. VERIFY THAT ALL ITEMS, CONDITIONS AND DIMENSIONS CORELATE. PLAN AHEAD!

G. CONTRACTOR(S) SHALL GUARANTEE WORK FOR A PERIOD OF ONE (1) YEAR FROM THE DATE OF SUBSTANTIAL COMPLETION.

H. CONTRACTOR(S) SHALL MAINTAIN APPROPRIATE INSURANCE FOR THIS PROJECT AS REQUIRED AND AGREED UPON BETWEEN THE OWNER AND THE CONTRACTOR(S).

I. CONTRACTOR(S) SHALL NOT ALLOW RUBBISH OR DEBRIS TO ACCUMULATE ON OR NEAR THE SITE. ALL RUBBISH SHALL BE REMOVED AND DISPOSED OF IN A LEGAL MANNER.

J. CONTRACTOR(S) SHALL COORDINATE ALL EQUIPMENT AND SPECIALTY ITEMS FURNISHED BY THE OWNER AS IT MAY RELATE AND EFFECT HIS WORK.

K. CONTRACTOR IS RESPONSIBLE FOR OBTAINING ALL NECESSARY PERMITS FOR CONSTRUCTION. THE OWNER SHALL PAY FOR ALL PERMITS.

L. THE ARCHITECT IS NOT RESPONSIBLE FOR ANY SUBSURFACE OR UNDERGROUND CONDITIONS OR UTILITIES INCLUDING, BUT NOT LIMITED TO, SOIL BEARING CAPACITIES; DRAINS; SEPTIC, SEWER, WATER, ETC. LOCATIONS; UTILITY LOCATIONS; ETC. CONTRACTOR IS RESPONSIBLE FOR VERIFYING SOIL BEARING CAPACITY AS REQUIRED THROUGH AN INDEPENDENT LICENSED TESTING LABORATORY. OWNER IS RESPONSIBLE FOR COST OF SAME. ASSUMED SOIL BEARING CAPACITY IS DESCRIBED IN DIVISION 3 BELOW.

M. CONTRACTOR(S) SHALL NOT SCALE DRAWINGS, AND SHALL NOTIFY ARCHITECT IF THERE ARE ANY DISCREPANCIES OR MISSING DIMENSIONS. SHOULD ANY INFORMATION BE IN CONFLICT, THE MORE RESTRICTIVE INFORMATION SHALL APPLY. LARGER SCALE DRAWINGS TAKE PRECEDENCE OVER SMALLLER SCALE.

N. CONTRACTOR SHALL DEMOLISH AND REMOVE ALL ITEMS AS NECESSARY TO ACHIEVE THE FINAL DESIGN AS DELINEATED ON THE DRAWINGS AND SPECIFIED HEREIN. CONTRACTOR SHALL FURNISH ALL NECESSARY EQUIPMENT FOR DEMOLITION WORK.

O. CONTRACTOR SHALL PROTECT ALL FACILITIES TO REMAIN DURING THE COURSE OF CONSTRUCTION.

## DIVISION 2 – SITE WORK

A. CONTRACTOR IS RESPONSIBLE FOR ALL LAYOUT OF THE WORK AND SHALL EMPLOY APPROPRIATE MEANS TO ACCURATELY ESTABLISH ALL WORK.

B. PERFORM EARTHWORK IN MANNER TO PREVENT SURFACE WATER FROM FLOWING INTO EXCAVATIONS, AND TO PREVENT WATER FROM FLOODING THE SITE OR SURROUNDING AREAS.

C. DO NOT ALLOW WATER TO ACCUMULATE IN EXCAVATIONS, REMOVE ALL WATER FROM EXCAVATIONS USING APPROPRIATE EQUIPMENT TO CONVEY THE WATER AWAY FROM THE SITE AND TO PREVENT SOFTENING OF FOUNDATION BOTTOMS, UNDERCUTTING FOOTINGS AND SOIL CHANGES DETRIMENTAL TO THE STABILITY OF SUBGRADES AND FOUNDATIONS.

D. PROTECT EXCAVATION BOTTOMS AGAINST FREEZING WHEN THE ATMOSPHERIC TEMPERATURE IS LESS THAN 35 DEGREES FAHRENHEIT (F) BY COVERING WITH DRY INSULATING MATERIALS OF SUFFICIENT DEPTH TO PREVENT FROST PENETRATION.

E. CONTRACTOR IS RESPONSIBLE FOR CLEARING AND PREPARING THE SITE IN THE AREA OF CONSTRUCTION. CONTRACTOR(S) SHALL EXERCISE CARE SO AS NOT TO DESTROY AREAS OF THE SITE THAT ARE NOT IN THE IMMEDIATE PROXIMITY OF THE WORK.

F. ALL EXISTING TREES AND SHRUBS NOT IN THE WAY OF CONSTRUCTION SHALL BE PROPERLY PROTECTED FROM DAMAGE DURING CONSTRUCTION.

G. CAREFULLY HAND EXCAVATE AROUND ALL UNDERGROUND UTILITIES.

H. CONTRACTOR SHALL BE RESPONSIBLE FOR RESTORING ALL SITE AREAS THAT ARE DISTURBED DURING CONSTRUCTION OR DEMOLITION OF EXISTING PAVED AREAS. THIS SHALL INCLUDE THE FINAL GRADING OF THE SITE AS WELL AS THE SEEDING AND HAYING OF ALL LAWN AREAS.

I. ALL DEBRIS SHALL BE REMOVED FROM THE PREMISES UPON COMPLETION OF THE WORK.

## DIVISION 3 – CONCRETE

A. FOOTINGS ARE DESIGNED FOR ONE AND ONE HALF (1-1/2) TON SOIL BEARING CAPACITY. ALL SOIL BEARING CAPACITIES TO BE VERIFIED BY THE CONTRACTOR AS REQUIRED. IF TESTS ARE REQUIRED FOR NON-COMPACTED AREAS, THEY SHALL BE PAID FOR BY THE OWNER. COORDINATE WITH THE SITE SOIL REPORT PREPARED BY THE OWNERS ENGINEERS. CONTRACTOR SHALL NOTIFY ARCHITECT OF ANY DOUBTFUL CONDITIONS.

B. FOOTING DEPTH TO BE A MINIMUM OF THREE (3) FEET FROM SURROUNDING FINISHED GRADE TO BOTTOM OF FOOTING. FOOTINGS SHALL BE PLACED ON UNDISTURBED SOIL OR CONTROLLED COMPACTED FILL.

C. FOOTINGS SHALL NOT BE PLACED ON FROZEN GROUND OR IN EXCAVATIONS CONTAINING WATER.

D. ALL CONCRETE SHALL BE CONTROLLED STONE CONCRETE COMPLYING WITH ALL ACI BUILDING CODE REQUIREMENTS. CONCRETE SHALL OBTAIN A 28-DAY COMPRESSIVE STRENGTH OF 3,500 PSI AT GARAGE SLABS AND 3,000 PSI AT ALL OTHER LOCATIONS, UNLESS NOTED OTHERWISE (UNO).

E. ALL CONCRETE SHALL CONFORM TO ACI PRACTICES FOR COLD WEATHER CONCRETING. ALL CONCRETE PLACED AT TEMPERATURES BELOW 50 DEGREES F SHALL CONTAIN THE WATER REDUCING ACCELERATOR "ACCELGUARD 80" AS MANUFACTURED BY THE EUCLID CHEMICAL CO., OR APPROVED EQUAL.

F. ALL CONCRETE SHALL CONTAIN THE WATER REDUCING ADMIXTURE "EUCON WR-75" OR APPROVED EQUAL.

G. CONCRETE SLABS: CONCRETE SLABS SHALL BE A MINIMUM OF 4" IN THICKNESS, PLACED ON 6 MIL POLYETHYLENE VAPOR BARRIER, ON 6" GRAVEL FILL. SLAB TO BE REINFORCED WITH 6X6, WELDED WIRE MESH (WWM), PLACED 1-1/2" DOWN FROM THE TOP OF SLAB AND OVER ANY PIPES AND CONDUITS IN SLAB. WWM MUST LAP ONE FULL MESH AT SIDE AND END LAPS AND MUST BE WIRED TOGETHER. WIRE MESH FABRIC FOR SLABS SHALL CONFORM TO ASTM A185, LATEST EDITION.

H. BASE COARSE UNDER CONCRETE SLABS SHALL BE GRAVEL OR CRUSHED STONE CONTAINING NOT MORE THAN 10% OF MATERIAL THAT PASSES THROUGH A NUMBER 4 SIEVE.

I. THE MAX. WEIGHT OF FLY ASH, OTHER POZZOLAINS, SILICA FUME OR SLAG THAT IS INCLUDED IN CONCRETE MIXTURES FOR GARAGE SLABS AND FOR EXTERIOR PORCHES, CARPORT SLABS, AND STEPS THAT WILL BE EXPOSED TO DEICING CHEMICALS SHALL NOT EXCEED THE PERCENTAGES OF THE TOTAL WEIGHT OF CEMENTITIOUS MATERIALS. MATERIALS USED TO PRODUCE CONCRETE AND TESTING THEREOF SHALL COMPLY WITH THE APPLICABLE STANDARDS LISTED IN ACI 318. IN ADDITION TO THE CEMENTS PERMITTED BY ACL 318, CEMENT COMPLYING WITH ASTM C1157 IS PERMITTED.

## DIVISION 4 – MASONRY

A. FOUNDATION WALLS TO BE HOLLOW LOAD BEARING CONCRETE MASONRY UNITS, SIZES AS INDICATED, CONFORMING TO ASTM C-90-85, FILLED SOLID WITH GROUT (3000PSI).

B. MORTAR SHALL BE TYPE S, 2000 PSI, CONFORMING TO ASTM C-270-89.

C. THE LAYING, HANDLING, PROTECTING, BONDING, CURING, AND CLEANING OF ALL MASONRY WORK SHALL BE IN ACCORDANCE WITH THE STANDARDS OF STRUCTURAL CLAY PRODUCTS INSTITUTE.

D. ALL CONCRETE BLOCK COURSES SHALL BE LAID PLUMB AND LEVEL WITH UNIFORM JOINTS AND CONSISTENT BONDING THROUGHOUT. CONCRETE BLOCK FOUNDATION WALLS SHALL SIT SQUARELY ON AND SHALL BE CENTERED ON THE CONCRETE FOOTINGS, UNLESS SHOWN OTHERWISE ON THE DRAWINGS.

E. PROVIDE HORIZONTAL WIRE REINFORCING IN CMU WALLS, DUR-O-WALL OR EQUAL, 16" OC (EVERY OTHER COURSE). PROVIDE VERTICAL REINFORCING IN MASONRY FOUNDATIONS, MINIMUM #5 @ 48" ON CENTER.

F. PROVIDE AND INSTALL MINIMUM 1/2" DIAMETER ANCHOR BOLTS, FASTENED TO PLATE WITH NUT AND WASHER, WITH STANDARD HOOK AT BOTTOM, AT FOUNDATION WALL TOP PLATES. BOLTS TO HAVE STANDARD HOOK END AND SHALL BE LOCATED AT 6'-0" ON CENTER, MAXIMUM, WITH NOT LESS THAN TWO (2) BOLTS PER PLATE SECTION, WITH ONE BOLT LOCATED NOT MORE THAN 12" OR LESS THAN SEVEN BOLT DIAMETERS FROM EACH END OF THE PLATE SECTION. BOLTS SHALL BE SET A MINIMUM DEPTH OF 7" INTO THE CMU AND THE BLOCK SHALL BE FILLED SOLID WITH GROUT. SET ANCHOR BOLTS A MAXIMUM OF 12" IN FROM CORNERS. WHERE INSTALLED IN CONCRETE SLAB OR WALLS, CONTRACTOR HAS THE OPTION TO INSTALL SIMPSON 'TITEN HD' ANCHORS INSTEAD OF CAST-IN-PLACE ANCHORS, INSTALLED PER MANUFACTURERS SPECIFICATIONS.

G. PROVIDE LOAD BEARING EXTRUDED ALUMINUM BRICK VENTS W/ OPERABLE DAMPERS & INSECT SCREENS TO VENTILATE NEW CRAWL SPACE. NET AREA OF VENTILATION SHALL BE MIN. OF 1 SQ. FT. FOR EACH 150 SQ. FT. OF CRAWL SPACE AREA W/ VAPOR BARRIER. LOCATE A MINIMUM OF 1 VENT WITHIN 3' OF EACH CORNER.

H. PROVIDE SLEEVES AT FOUNDATIONS WHERE REUIRED FOR PENETRATIONS SUCH AS SEWER AND WATER LINES, ETC.

## DIVISION 5 – METALS

A. PROVIDE ALL ANCHORS, PLATES AND OTHER CONNECTORS AND ALL MISCELLANEOUS STEEL AND IRON AS REQUIRED TO PROVIDE A COMPLETE FINISHED INSTALLATION. SEE DETAILS FOR SIZE OF LINTELS AT OPENINGS.

B. ALL MATERIAL SHALL BE NEW AND UNUSED HERETO BEFORE. ALL MATERIAL SHALL BE CLEAN AND FREE OF OIL, GREASE, MILL SCALE OR RUST. ALL STEEL TO BE SHOP COATED EXCEPT WHEN ENCASED IN CONCRETE, AT BEARING SURFACES, OR WITHIN 2" OF FIELD WELDS.

C. ALL STEEL WORK SHALL BE IN ACCORDANCE WITH THE AISC CODES AND SPECIFICATIONS.

D. MATERIAL NOT OTHERWISE SPECIFIED OR SHOWN ON THE DRAWINGS SHALL BE APPROVED QUALITY OF THE TYPE NORMALLY USED FOR THE PURPOSE. ALL ITEMS NECESSARY FOR THE WORK, WHETHER, SPECIFIED OR NOT, SHALL BE INCLUDED IN THE WORK.

E. WHERE ALUMINUM SURFACES COME IN CONTACT WITH METAL OTHER THAN STAINLESS STEEL, ZINC, WHITE BRONZE OF SMALL AREA OR OTHER METALS COMPATIBLE WITH ALUMINUM, KEEP ALUMINUM SURFACES APART BY 1) PAINTING THE DISSIMILAR METAL WITH A PRIME COAT OF ZINC CHROMATE PRIMER OR OTHER SUITABLE PRIMER, FOLLOWED BY TWO COATS OF ALUMINUM METAL AND MASONRY PAINT, OR OTHER SUITABLE PROTECTIVE COATING, EXCLUDING THOSE CONTAINING LEAD PIGMENTATIONS, 2) PAINTING THE DISSIMILAR METAL WITH A COATING OF HEAVY BODIED BITUMINOUS PAINT, 3) A GOOD QUALITY CAULKING PLACED BETWEEN ALUMINUM AND DISSIMILAR METAL OR 4) A NON-ABSORPTIVE TAPE OR GASKET.

## DIVISION 6 – WOOD AND PLASTIC

A. LUMBER SHALL CONFORM TO THE LATEST EDITION OF THE "NATIONAL DESIGN SPECIFICATION FOR WOOD CONSTRUCTION" AS PUBLISHED BY THE NATIONAL FOREST PRODUCTS ASSOCIATION, UNLESS OTHERWISE NOTED.

B. ALL LUMBER SHALL BE DOUGLAS FIR-LARCH #2 OR BETTER, CAPABLE OF DEVELOPING THE FOLLOWING MINIMUM ALLOWABLE STRESSES:

| SIZE | Fb (PSI) (SINGLE) | Fb (PSI) (REPETITIVE) | Ft (PSI) | Fc ll (PSI) |
|---|---|---|---|---|
| 2x4 | 1,312 | 1,508 | 862 | 1,495 |
| 2x6 | 1,137 | 1,307 | 747 | 1,430 |
| 2x8 | 1,050 | 1,207 | 690 | 1,365 |
| 2x10 | 962 | 1,106 | 632 | 1,300 |
| 2x12 | 875 | 1,006 | 575 | 1,300 |

Fv (HORIZONTAL SHEAR) = 95 PSI
Fc (PERPENDICULAR TO GRAIN) = 625 PSI
E (MODULUS OF ELASTICITY) = 1,600,000 PSI

C. PROVIDE NAILERS OR LEDGERS WHERE REQUIRED; FASTEN SECURELY. LAP AND SPIKE ENDS OF RAFTERS OR JOISTS. ANCHOR ALL FRAMING TO WALLS NOT MORE THAN 4'-0" O.C.; INCLUDING RAFTERS AND JOISTS PARALLEL TO WALLS.

D. ALL FRAMING CONNECTORS & FASTENERS SHALL BE HOT DIPPED GALVANIZED (GALV) OR TYPE 316L STAINLESS STEEL (SS), AS MANUFACTURED BY SIMPSON STRONG-TIE. CARRIAGE BOLTS ARE NOT CODE COMPLIANT & ARE NOT ACCEPTABLE

E. ALL ROOF RAFTERS SHALL BE SECURED TO BEARING POINTS AND STUDS BELOW WITH SIMPSON WIND UPLIFT (HURRICANE) CONNECTORS. ALIGN RAFTERS WITH STUDS SO SINGLE CONNECTOR MAY BE USED. ALL JOISTS SHALL BE SECURED TO BEAMS WITH APPROPRIATE HANGERS.

F. ALL WOOD STUDS TO RUN CONTINUOUS FROM FLOOR TO CEILING.

G. ALL HEADERS AND WOOD BEAMS ARE TO BEAR ON A MINIMUM OF (2)2x MEMBERS.

H. ALL JOISTS SHALL BE SECURED TO FLUSH BEAMS AND LEDGERS WITH APPROPRIATE SIMPSON METAL HANGERS. SECURE WOOD POSTS TO BEAMS WITH METAL COLUMN CAPS AND TO BASE WITH METAL COLUMN BASES.

I. UNLESS SHOWN OTHERWISE ON THE DRAWINGS: PROVIDE (2) 2X4 POSTS AT ALL BEARING CONDITIONS THAT HAVE (2) 2X HEADERS AND (3) 2X4 POSTS THAT HAVE (3) 2X HEADERS OR BEAMS. IN NO CASE SHALL THE BEARING POST BE LESS THAN THE DIMENSION OF THE BEAM OR HEADER. WHEN NOT SHOWN ON THE DRAWINGS, THE DEFAULT HEADER SHALL BE AS NOTED ON THE FRAMING LEGEND.

J. PLYWOOD ROOF SHEATHING: APA STRUCTURAL I RATED 5/8" MIN. THICK SHEATHING, EXTERIOR GRADE. AT FRONT ROOF MATCH EXISTING SHEATHING. INSTALL WITH THE LONG DIMENSION OR STRENGTH AXIS OF THE PANEL ACROSS SUPPORTS AND WITH PANEL CONTINUOUS OVER TWO OR MORE SPANS. PANELS TO HAVE TONGUE AND GROOVE EDGES. PANEL END JOINTS SHALL OCCUR OVER FRAMING. ALLOW 1/8" SPACING AT PANEL ENDS AND EDGES UNLESS OTHERWISE RECOMMENDED BY PANEL MANUFACTURER. PROVIDE "A" FACE AT VOLUME CEILING AREAS.

PLYWOOD WALL SHEATHING: APA RATED 1/2" THICK SQUARE EDGE SHEATHING, EXTERIOR GRADE, UNLESS OTHERWISE NOTED. ALLOW 1/8" SPACING AT PANEL ENDS AND EDGES UNLESS OTHERWISE RECOMMENDED BY THE PANEL MANUFACTURER.

PLYWOOD SUBFLOORING:
(IN ATTICS AND UNDER STRUCTURAL FINISH FLOOR SUCH AS WOOD STRIP OR TILE UNDERLAYMENT). APA STRUCTURAL 1 RATED 3/4" OR THICKER EXTERIOR SHEATHING OR EQUAL, GLUED AND SCREWED TO JOISTS. INSTALL WITH THE LONG DIMENSIONOR STRENGTH AXIS OF THE PANEL ACROSS SUPPORTS AND WITH PANEL CONTINUOUS OVER TWO OR MORE SPANS. PANEL END JOINTS SHALL OCCUR OVER FRAMING. ALLOW 1/8" SPACING AT PANEL ENDS AND EDGES UNLESS OTHERWISE RECOMMENDED BY PANEL MANUFACTURER.

COMBINED SUBFLOOR-UNDERLAYMENT:
(UNDER CARPET AND PAD). APA RATED 3/4" STURD-I-FLOOR EXTERIOR SHEATHING OR EQUAL, GLUED AND SCREWED TO JOISTS. INSTALL WITH THE LONG DIMENSIONOR STRENGTH AXIS OF THE PANEL ACROSS SUPPORTS AND WITH PANEL CONTINUOUS OVER TWO OR MORE SPANS. PANEL EDGES SHALL BE TONGUE-AND-GROOVE. STAGGER PANEL END JOINTS. ALLOW 1/8" SPACING AT PANEL ENDS AND EDGES UNLESS OTHERWISE RECOMMENDED BY PANEL MANUFACTURER.

K. BUILDING PAPER: 15 LB. FELT BITUMINOUS IMPREGNATED AT ROOFS AND TYVEK HOUSE WRAP AT WALLS.

L. ALL WOOD IN CONTACT WITH MASONRY OR THE GROUND TO BE ARSENIC AND CHROMIUM FREE PRESSURE TREATED LUMBER (PT) FOR GROUND CONTACT AS MANUFACTURED BY CHEMICAL SPECIALTIES, INC OR EQUAL.

M. 2.0E 'MICROLLAM' LAMINATED VENEER LUMBER (LVL), 2.0E 'PARALLAM' PARALLEL STRAND LUMBER (PSL) & 1.55E 'TIMBERSTRAND' LAMINATED STRAND LUMBER (LSL) & 'TJ RIMBOARD' MEMBERS, AS NOTED ON THE DRAWINGS, ARE AS MANUFACTURED BY WEYERHAEUSER. SIZES SHOWN ON PLANS ARE MINIMUM REQUIRED, LARGER BEAMS MAY BE USED.

N. ALL BEAMS AND ENGINEERED JOISTS SHALL BE INSTALLED, FASTENED, ANCHORED, ETC. IN STRICT ACCORDANCE WITH MANUFACTURERS WRITTEN INSTRUCTIONS. PROVIDE ALL REQUIRED HANGERS, BLOCKING, CONNECTORS, ETC. IN STRICT ACCORDANCE WITH MANUFACTURERS ENGINEERED DRAWINGS. CONTRACTOR MAY USE OTHER ENGINEERED BEAMS AND JOISTS, WITH ENGINEERED DRAWINGS SUPPLIED BY MANUFACTURER TO SHOW THEY ARE COMPARABLE TO SPECIFIED PRODUCTS.

O. ALL INTERIOR WOOD TRIM TO BE AS SELECTED BY OWNER.

P. EXTERIOR TRIM, FASCIAS, PANELS & MISC. TRIM SHOWN ON ELEVATIONS & DETAILS TO BE LOW MAINTENANCE VINYL OR CELLULAR PVC TRIM AS MANUFACTURED BY AZEK BUILDING PRODUCTS, OR APPROVED EQUAL.

Q. UNO, WOOD POSTS SHALL BE MULTIPLE STUDS SPIKED TOGETHER WITH 10 PENNY NAILS AT 8" O.C. ALL WOOD POSTS SHALL BE SOLIDLY BLOCKED DOWN TO THE FOUNDATION WALL, GIRDER OR FOOTING WITH LIKE MATERIALS AND WITH THE GRAIN ORIENTED IN THE VERTICAL DIRECTION.

R. UNO, DOUBLE JOISTS AND RAFTERS AT ALL OPENINGS. DOUBLE ALL JOIST UNDER WALLS WHICH ARE PARALLEL TO THE SPAN AND WHICH ARE GREATER THAN 50% OF THE SPAN. THESE DOUBLED JOISTS MAY BE SPARATED BY 3-1/2" TO ALLOW FOR PIPES AND DUCTS, PROVIDED THAT SOLID BLOCKING IS PROVIDED BETWEEN THEM AT A MAX. 24" O.C.

S. PROVIDE ALL NECESSARY AND REQUIRED BRACING, BRIDGING AND SHORING, TEMPORARY OR OTHERWISE.

T. THE QUANTITY AND SIZE OF FASTENERS CONNECTING BUILDING ELEMENTS AND MATERIALS TOGETHER SHALL NOT BE LESS THAN THAT AS SPECIFIED IN 2015 IRC, TABLE R602.3(1) 'FASTENER SCHEDULE'.

U. STRUCTURAL FLOOR MEMBERS SHALL NOT BE CUT, BORED OR NOTCHED IN EXCESS OF THE LIMITATIONS SPELLED OUT IN IRC R502.8.

V. PROVIDE BRACED WALL PANEL UPLIFT LOAD PATH PER R602.3.5. BRACED WALL PANELS LOCATED AT EXTERIOR WALLS THAT SUPPORT ROOF RAFTERS OR TRUSSES (INCLUDING STORIES BELOW THE TOP STORY) SHALL HAVE THE FRAMING MEMBERS CONNECTED IN ACCORDANCE WITH ONE OF THE FOLLOWING 2 METHODS:
1. FASTENING IN ACCORDANCE WITH TABLE R602.3(1) WHERE:
1.1. THE ULTIMATE DESIGN WIND SPEED DOES NOT EXCEED 115 MPH, THE WIND EXPOSURE CATEGORY IS 'B', THE ROOF PITCH IS 3:12 OR GREATER, & THE ROOF SPAN IS 32 FEET OR LESS.
1.2. THE NET UPLIFT VALUE AT THE TOP OF A WALL DOES NOT EXCEED 100 PLF. THE NET UPLIFT VALUE SHALL BE DETERMINED IN ACCORDANCE WITH SECTION R802.11 & SHALL BE PERMITTED TO BE REDUCED BY 60 PLF FOR EACH FULL WALL ABOVE.
2. WHERE THE NET UPLIFT VALUE AT THE TOP OF A WALL DOES EXCEEDS 100 PLF, INSTALLING APPROVED UPLIFT FRAMING CONNECTORS TO PROVIDE A CONTINUOUS LOAD PATH FROM THE TOP OF THE WALL TO THE FOUNDATION, OR TO A POINT WHERE THE UPLIFT FORCE IS 100 PLF OR LESS. THE NET UPLIFT FORCE SHALL BE DETERMINED IN ITEM 1.2 ABOVE.

W. PROVIDE BRACED WALL PANELS AS SHOWN ON PLANS, ELEVATIONS AND DETAILS, AND AS REQUIRED BY SECTION IRC R602.10. SEE FRAMING NOTES AND DETAILS.

X. ALL FLOOR, ATTIC AND ROOF FRAMING MEMBERS OF 2x10 OR LARGER SHALL HAVE ONE END BRACED FOR THE ENTIRE SPAN WITH PLYWOOD SHEATHING, OR SHALL HAVE BRIDGING THAT CONSISTS OF NOT LESS THAN 1x3 LUMBER, DOUBLE NAILED AT EACH END, OR OF EQUIVALENT METAL BRACING OF EQUAL RIGIDITY AT MAX. 8'-0" O.C. A LINE OF BRIDGING OR BLOCKING SHALL ALSO BE INSTALLED AT SUPPORTS OF ALL JOISTS AND RAFTERS WHERE LATERAL SUPPORT IS NOT OTHERWISE PROVIDED.

Y. CONTRACTOR SHALL PROVIDE WOOD OR METAL GUARDRAILS AT BALCONIES, AS REQUIRED BY CODE. OWNER TO SELECT COMPONENTS (BALUSTERS, RAILS, FINISH, ETC.). BALCONY GUARDRAILS TO BE NOT LESS THAN 42 INCHES IN HEIGHT, & HAVE BALUSTERS OR BE OF SOLID MATERIAL SUCH THAT A SPHERE WITH A DIAMETER OF 4" CANNOT PASS THROUGH ANY OPENING. GUARDS SHALL BE DESIGNED & CONSTRUCTED TO WITHSTAND A CONCENTRATED LOAD OF 200 POUNDS APPLIED AT ANY POINT & IN ANY DIRECTION (FOR GUARDS: ALONG THE TOP RAILING MEMBER).

## DIVISION 7– THERMAL & MOISTURE PROTECTION

A. ROOF SHINGLES TO BE CLASS A, FIBERGLASS ASPHALT SHINGLES AS MANUFACTURED BY GAF-ELK, OR EQUAL. FURNISHED WITH MANUFACTURER'S WRITTEN WARRANTY. INSTALL ALL ROOFING IN STRICT ACCORDANCE WITH MANUFACTURER'S WRITTEN INSTRUCTIONS AND RECOMMENDATIONS. SHINGLES TO BE SELECTED BY OWNER.

B. PROVIDE METAL FLASHING AT ALL JUNCTURES BETWEEN PLANE CHANGES & AS SHOWN ON THE DETAILS, IN ACCORDANCE WITH SMACNA SHEET METAL MANUAL.

C. PROVIDE ALL ROOFING ACCESSORIES INCLUDING ALL COMPOSITION & METAL FLASHING, FASTENERS, CEMENTS, STARTER COURSES, ETC., AS REQUIRED TO PROVIDE A COMPLETE FINISHED INSTALLATION.

D. NEW GUTTERS & LEADERS TO BE SELECTED BY OWNER.

E. PROVIDE ALL NECESSARY CAULKING AND SEALANTS TO COMPLETE THE WORK.

F. PROVIDE WATERPROOFING UNDERLAYMENT, "WINTERGUARD" AS MANUFACTURED BY CERTAINTEED, OR EQUAL UNDER ALL SHINGLED ROOF AREAS AT VALLEYS & EAVES, MINIMUM OF 24" FROM FACE OF WALL BELOW.

G. SOFFIT PANELS SHALL BE SELECTED BY OWNER.

H. THE BUILDING ENVELOPE FOR THE NEW CONSTRUCTION MEETS OR EXCEEDS THE ENERGY SUB-CODE DESIGN CRITERIA IN ACCORDANCE WITH U.C.C. BULLETIN NO. 07-2, COMPLIANCE WITH RESCHECK SOFTWARE. ARCHITECT TO

I. SUBMIT COMPLIANCE REPORT.

J. INSULATION TO BE UNFACED FIBERGLASS BATTS WITH A SEPARATE 'MEM-BRAIN' VAPOR RETARDER ON THE INTERIOR SIDE, OR FACED BATTS, BY OWENS CORNING, OR EQUAL. MINIMUM REQUIRED INSULATION: 5.5" THICK R-21 BATTS AT 2x6 EXTERIOR WALLS, R-38 BATTS AT ATTIC FLOOR (SECOND FLOOR CEILING). PROVIDE CORRUGATED FOAM BAFFLES WHERE REQUIRED TO MAINTAIN AIR FLOW AT EAVES. AT 2x4 EXTERIOR WALLS PROVIDE R-15 BATTS W/ CONTINUOUS R-5 FOAM SHEATHING AT EXTERIOR. AS AN ALTERNATE, SPRAY FOAM MAY BE USED IN THE WALL CAVITIES WITH A MIN. R-21 VALUE. INSTALL ALL MATERIALS PER MANUFACTURER'S INSTRUCTIONS.

K. ROOF RIDGE VENT SHALL BE AS MANUFACTURED BY COR-A-VENT, OR EQUAL.

L. SIDING & TRIM TO BE SELECTED BY OWNER, INCLUDING MANUFACTURER, TYPE, COLOR, ETC. INSTALL SIDING, INCLUDING ALL FASTENERS, TRIM, ETC. FOR A COMPLETE INSTALLATION. PROVIDE 'J' CHANNELS AT WINDOWS & DOORS AS REQUIRED BY MANUFACTURER. INSTALL PER MANUFACTURERS PRINTED INSTRUCTIONS.

M. DECK MEMBRANE AT BALCONIES TO BE 'DURADEK' VINYL DECKING AS MANUFACTURED BY DURADEK, OR APPROVED EQUAL. PROVIDE ALL ADHESIVES, DRAINAGE MAT, FASTENERS, FLASHING, ETC. FOR A COMPLETE WATERTIGHT INSTALLATION, TO BE INSTALLED BY A TRAINED & AUTHORIZED INSTALLER. ALL JOINTS, PENETRATIONS, WALL & DOOR JUNCTURES, ETC. SHALL BE PER THE MANUFACTURER'S RECOMMENDED DETAILS. PREPARE SUBSTRATE AS REQUIRED BY MANUFACTURER.

## DIVISION 8– DOORS, WINDOWS, SKYLIGHTS

A. OWNER TO SELECT EXTERIOR DOORS, GARAGE DOORS & ALL WINDOWS. UNITS SHOWN ON THE ELEVATIONS ARE AS MANUFACTURED BY ANDERSEN, BUT OWNER MAY SELECT UNITS BY OTHER MANUFACTURERS, AS LONG AS THEY HAVE LOW-E, 'U' VALUE OF .33 OR LESS, INSULATING GLASS. ALL GLASS WHICH IS REQUIRED TO BE SAFETY GLASS, SUCH AS AT BATHTUBS OR GLAZING WITHIN 18" OF FLOOR, IS THE RESPONSIBILITY OF THE WINDOW SUPPLIER AND OWNER'S AGENT ORDERING THE WINDOWS. ALIGN WINDOW HEADS WITH INTERIOR DOOR HEADS, U.N.O. AT LEAST ONE WINDOW IN ALL BEDROOMS SHALL BE AN EGRESS UNIT, PER CODE, UNLESS THERE IS A DOOR TO THE EXTERIOR.

B. ALL INTERIOR DOORS & HARDWARE SHALL BE SELECTED BY OWNER.

## DIVISION 9 – FINISHES

A. UNLESS OTHERWISE NOTED, ALL GYPSUM WALLBOARD (GWB) TO BE 1/2" THICK GYPSUM BOARD AS MANUFACTURED BY U.S.G., GEORGIA PACIFIC, OR EQUAL. GYPSUM BOARD TO BE SCREWED, TAPED, SPACKLED & SANDED SMOOTH TO PROVIDE A COMPLETE FINISHED INSTALLATION. FURNISH ALL WALLBOARD ACCESSORIES AS REQUIRED. GWB AT BATHROOMS SHALL BE WATER RESISTANT TYPE (WR) AS A MINIMUM, WITH 'DENSGUARD' TILE BACKER GWB AT TUBS & SHOWERS. INSTALLATION OF GYPSUM MATERIALS SHALL FOLLOW THE SPECIFICATIONS OF THE CURRENT EDITION OF THE GYPSUM HANDBOOK.

B. ALL GWB MATERIALS AND ACCESSORIES SHALL BE IDENTIFIED BY THE MANUFACTURER'S DESIGNATION TO INDICATE COMPLIANCE WITH ASTH C36, C79, C475, C514, C630, C960, C1002, C1047, C1177, C1178, C1278 AND C1395. SCREWS FOR ATTACHING GWB TO WOOD FRAMING SHALL BE TYPE S OR TYPE W, IN ACCORDANCE WITH ASTM C1002, AND SHALL PENETRATE THE WOOD NOT LESS THAN 5/8".

C. ALL INTERIOR WALL AND FLOOR FINISHES SHALL BE SELECTED BY THE OWNER. GENERAL CONTRACTOR SHALL PROVIDE APPROPRIATE UNDERLAYMENTS AND PREPARE SUBSTRATES FOR THE SELECTED FINISHES. REVIEW OPTIONS WITH OWNER BEFORE ORDERING.

D. UNLESS OTHERWISE NOTED, ALL EXPOSED UNFINISHED SURFACES (GWB, WOOD TRIM, ETC.) SHALL BE PAINTED. PAINT SHALL BE LATEX, AS MANUFACTURED BY SHERWIN WILLIAMS OR EQUAL. PROVIDE RECOMMENDED PRIMERS, PREPARE SURFACES & APPLY PER MANUFACTURER RECOMMENDATIONS. PROVIDE ONE (1) COAT PRIMER & TWO (2) FINISH COATS PAINT. MATTE FINISH FOR WALLS & CEILINGS, SEMI-GLOSS FOR TRIM, GLOSS FOR EXTERIOR. COLORS TO BE SELECTED BY OWNER.

E. CONTRACTOR SHALL BE RESPONSIBLE FOR INSTALLING ALL TILE, REVIEW EXTENT OF TILE WITH OWNER. TILE & GROUT COLORS SHALL BE SELECTED BY OWNER & INSTALLED BY CONTRACTOR. ALL TILE WORK, INCLUDING PREPARATION OF SUBSTRATE & TILE & GROUT INSTALLATION, SHALL BE PER THE RECOMMENDATIONS OF THE LATEST EDITION OF THE TILE COUNCIL OF AMERICA INC. HANDBOOK & THE MANUFACTURER'S INSTALLATION INSTRUCTIONS. METHOD OF INSTALLATION FOR WALLS & FLOORS SHALL BE THIN SET, INCLUDING 'DITRA' UNCOUPLING WATERPROOFING MEMBRANE, AS MANUFACTURED BY SCHLUTER SYSTEMS, FOR ALL TILE FLOORING. USE 'DITRA-XL' IF TILE IS BEING INSTALLED ADJACENT TO 3/4" THICK SOLID WOOD FLOORS. ALL TILED TUB AND SHOWER SURROUNDS: PROVIDE SCHLUTER SHOWER SYSTEMS INTEGRATED COMPONENTS FOR A COMPLETE WATERTIGHT INSTALLATION. COMPONENTS INCLUDE THE 'KERDI' & 'KERDI-BAND' WATERPROOFING MEMBRANE & STRIP, 'KERDI-KERECK' PRE-FORMED INSIDE & OUTSIDE CORNERS, 'KERDI-SEAL' & KERDI-FIX' SEALANT & BONDING COMPOUNDS. INSTALL SYSTEM AS RECOMMENDED BY THE MANUFACTURER'S INSTALLATION HANDBOOKS. ALL TILED SHOWER RECEPTORS: PROVIDE SCHLUTER SHOWER SYSTEMS INTEGRATED COMPONENTS FOR A COMPLETE WATERTIGHT INSTALLATION. COMPONENTS INCLUDE THE 'KERDI-SHOWER-ST' PREFABRICATED SHOWER TRAY, CUT TO FIT AS REQUIRED, 'KERDI-SHOWER-SC' PREFABRICATED SHOWER CURB, 'KERDI-DRAIN' SQUARE FLOOR DRAIN, 'KERDI' & 'KERDI-BAND' WATERPROOFING MEMBRANE & STRIP, 'KERDI-KERECK' PRE-FORMED INSIDE & OUTSIDE CORNERS, 'KERDI-SEAL' & KERDI-FIX' SEALANT & BONDING COMPOUNDS. INSTALL SYSTEM IN CONJUNCTION WITH THE SHOWER SURROUND SYSTEM SPECIFIED AND AS RECOMMENDED BY THE MANUFACTURER'S INSTALLATION HANDBOOKS.

F. THROUGHOUT THE BASEMENT PROVIDE FIREBLOCKING AT COMBUSTIBLE CONSTRUCTION TO CUT OFF ALL CONCEALED DRAFT OPENINGS (BOTH VERTICAL & HORIZONTAL) TO FORM AN EFFECTIVE FIRE BARRIER BETWEEN STORIES, PER SECTION R302.11 OF THE CODE.

## DIVISIONS 10, 11, 12, 13 & 14

A. ACCESSORIES & SHOWER DOORS FOR NEW OR RENOVATED BATHROOMS SHALL BE SELECTED BY THE OWNER.

B. PULL DOWN ATTIC STAIR SHALL BE SELECTED & PAID FOR BY OWNER & INSTALLED BY THE CONTRACTOR. UNIT TO HAVE A MIN. ROUGH OPEN ING OF 22" BY 30", INSTALLED PER MANUFACTURERS SPECIFICATIONS. REVIEW LOCATION & OPTIONS WITH OWNER BEFORE ORDERING.

C. ALL BATHROOM & KITCHEN CABINETS, APPLIANCES & COUNTERTOPS SHALL BE SELECTED BY THE OWNER. COORDINATE DELIVERY & INSTALLATION OF CABINETRY, COUNTERTOPS & APPLIANCES WITH SUPPLIERS, & COORDINATE ROUGH-INS FOR APPLIANCES.

D. EXTERIOR COLUMNS TO BE LOAD BEARING FIBER GLASS REINFORCED COLUMNS AS MANUFACTURED BY H. B. & G., OR EQUAL. PROVIDE 12"ø PLAIN ROUND SMOOTH TAPERED COLUMN WITH TUSCAN STYLE BASE & CAPITAL, WITH FLASHING CAP WHERE TOP IS EXPOSED TO WEATHER. INSTALL & FASTEN COLUMNS AS RECOMMENDED BY THE COLUMN MANUFACTURER. SECURE TOP BEAM THROUGH COLUMN TO CONCRETE OR MASONRY FOUNDATION WITH SIMPSON HOLLOW COLUMN UPLIFT CONNECTORS, SEE TECHINICAL BULLETIN T-C-COLUMN 17.

## DIVISION 15 – MECHANICAL

A. CONTRACTORS SHALL PERFORM ALL HVAC AND PLUMBING WORK IN ACCORDANCE WITH ALL APPLICABLE CODES, LAWS, ORDINANCES, RULES & REGULATIONS.

B. MECHANICAL CONTRACTOR IS RESPONSIBLE FOR THE DESIGN & INSTALLATION OF THE NEW DIRECT VENT HIGH EFFICIENCY HVAC SYSTEM, WITH ALL COMPONENTS (FURNACE, AIR FILTER, HUMIDIFIER, CONDENSERS, DUCTS, PIPES, REGISTERS, CONTROLS, WIRING, ETC.), FOR A COMPLETE SYSTEM. REMOVE EXISTING CHIMNEY & EQUIPMENT. OWNER TO SELECT ALL EQUIPMENT & COMPONENTS, & LOCATIONS FOR INTERIOR EQUIPMENT & EXTERIOR CONDENSERS.

C. HVAC DIAGRAMS, IF REQUIRED, SHALL BE FURNISHED BY HVAC CONTRACTOR. PLUMBING AND GAS RISER DIAGRAMS, IF REQUIRED, SHALL BE FURNISHED BY PLUMBING CONTRACTOR.

D. ALL PLUMBING FIXTURES, APPLIANCES, FITTINGS, ETC SHALL BE PAID FOR & SELECTED BY THE OWNER. CONTRACTOR SHALL COORDINATE DELIVERY & INSTALL UNITS. PROVIDE NEW HOT WATER HEATERS, SELECTED BY OWNER.

E. ANY HOOD OR EXHAUST THAT EXCEEDS 400 CFM REQUIRES MAKE UP AIR IN THE AFFECTED SPACE.

## DIVISION 16 – ELECTRICAL

A. CONTRACTOR SHALL PERFORM ALL WORK IN ACCORDANCE WITH ALL APPLICABLE CODES, LAWS, ORDINANCES, RULES, AND REGULATIONS INCLUDING REGULATIONS OF THE LOCAL UTILITY CO. AND THE 2014 EDITION OF THE NATIONAL ELECTRIC CODE.

B. ELECTRICAL CONTRACTOR SHALL INSPECT THE EXISTING ELECTRICAL SYSTEM & ADD TO OR EXTEND SAME TO ACCOMODATE THE NEW WORK. THE FINAL COMPLETE DESIGN AND RELATED INSTALLATION SHALL BE THE RESPONSIBILITY OF A LICENSED ELECTRICIAN AS ALLOWED AND REQUIRED BY THE NEW JERSEY UNIFORM CONSTRUCTION CODE, AND SHALL MEET ALL REQUIREMENTS AS SET FORTH THEREIN.

C. CODE COMPLIANCE SHALL BE THE RESPONSIBILITY OF THE LICENSED ELECTRICIAN.

D. CONTRACTOR SHALL FURNISH ALL WIRING DEVICES REQUIRED AND LAMPS FOR LIGHT FIXTURES, UNLESS NOTED OTHERWISE.

E. ALL BUILDING WIRE SHALL BE COPPER AS REQUIRED BY LOAD AND HAVE A MINIMUM 600 VOLT TYPE THHN INSULATION. A HIGHER RATED TEMPERATURE INSULATION SHALL BE UTILIZED WHERE REQUIRED BY AMBIENT CONDITION OR CODE.

F. ALL FIXTURES TO BE UL APPROVED AND SHALL BEAR THE LABEL OF UNDERWRITER'S LABORATORIES. RECESSED LIGHT FIXTURES TO BE TYPE REQUIRED FOR THE INSTALLATION AS REQUIRED BY CODE, I.E., THERMALLY PROTECTED OR TYPE IC WHERE INSTALLED IN INSULATED JOIST OR RAFTER SPACES. FIXTURES TO BE AS MANUFACTURED BY LIGHTOLIER, HALO, PROGRESS OR EQUAL. REVIEW ALL LIGHT FIXTURE SELECTIONS WITH OWNER PRIOR TO ORDERING OR INSTALLATION OF FIXTURES.

G. SERVICE PANEL BOX TO BE LABELED BY THE ELECTRICAL CONTRACTOR SHOWING WHAT AREAS EACH BREAKER SERVES.

H. RECEPTACLES AT EXTERIOR, GARAGE, BATHS & KITCHENS & ANYWHERE ELSE REQUIRED BY CODE SHALL BE PROTECTED BY GROUND FAULT INTERRUPTER.

I. NEW SWITCHES & SWITCH PLATES SHALL BE SELECTED BY OWNER. OWNER TO SELECT FINAL LOCATIONS FOR ALL ELECTRICAL ITEMS.

J. ALL DECORATIVE OR EXPOSED LIGHT FIXTURES, PENDANTS, LAVATORY LIGHTING, UNDERCABINET LIGHTS & WALL SCONCES, & BATHROOM EXHAUST FAN/LIGHT UNITS, SHALL SELECTED BY OWNER.

K. SWITCH AND OUTLET LOCATIONS SHOWN ON THE PLANS ARE DIAGRAMATIC; OWNER TO SELECT FINAL LOCATIONS. ALL OUTLETS IN LIVING SPACES SHALL MEET THE REQUIREMENTS OF ARTICLE 210.52 OF THE NEC CODE, INCLUDING SPACING RECEPTACLES SUCH THAT NO POINT MEASURED HORIZONTALLY ALONG THE FLOOR LINE IN ANY WALL SPACE IS MORE THAN 6 FEET FROM A RECEPTACLE OUTLET, AND ANY SPACE THAT IS 2 FEET WIDE OR MORE SHALL HAVE AN OUTLET.

L. REVIEW WITH OWNER IF ELECTRIC FLOOR HEAT MATS ARE TO BE INSTALLED IN ANY BATHROOMS, BY NUHEAT OR EQUAL. ELECTRICAL CONTRACTOR TO PROVIDE GFCI OUTLET FOR MAT & WIRING FOR THERMOSTAT. IF ANY ARE TO BE PROVIDED, OWNER SHALL PAY FOR & SELECT WITH INSTALLATION BY CONTRACTOR.

M. NOTE: PROVIDE NEW HARD WIRED, INTERCONNECTED SMOKE, HEAT & CARBON MONOXIDE DETECTORS TO MEET THE FOLLOWING REQUIREMENTS:
PROVIDE SMOKE DETECTORS, MIN. 1 AT EACH LEVEL, MIN. 1 PER BEDROOM, AND MIN. 1 IN HALLWAY IN VICINITY OF BEDROOMS.
PROVIDE SINGLE STATION CARBON MONOXIDE ALARM IN THE IMMEDIATE VICINITY OF EACH SLEEPING AREA. DEVICE TO BE UL APPROVED.

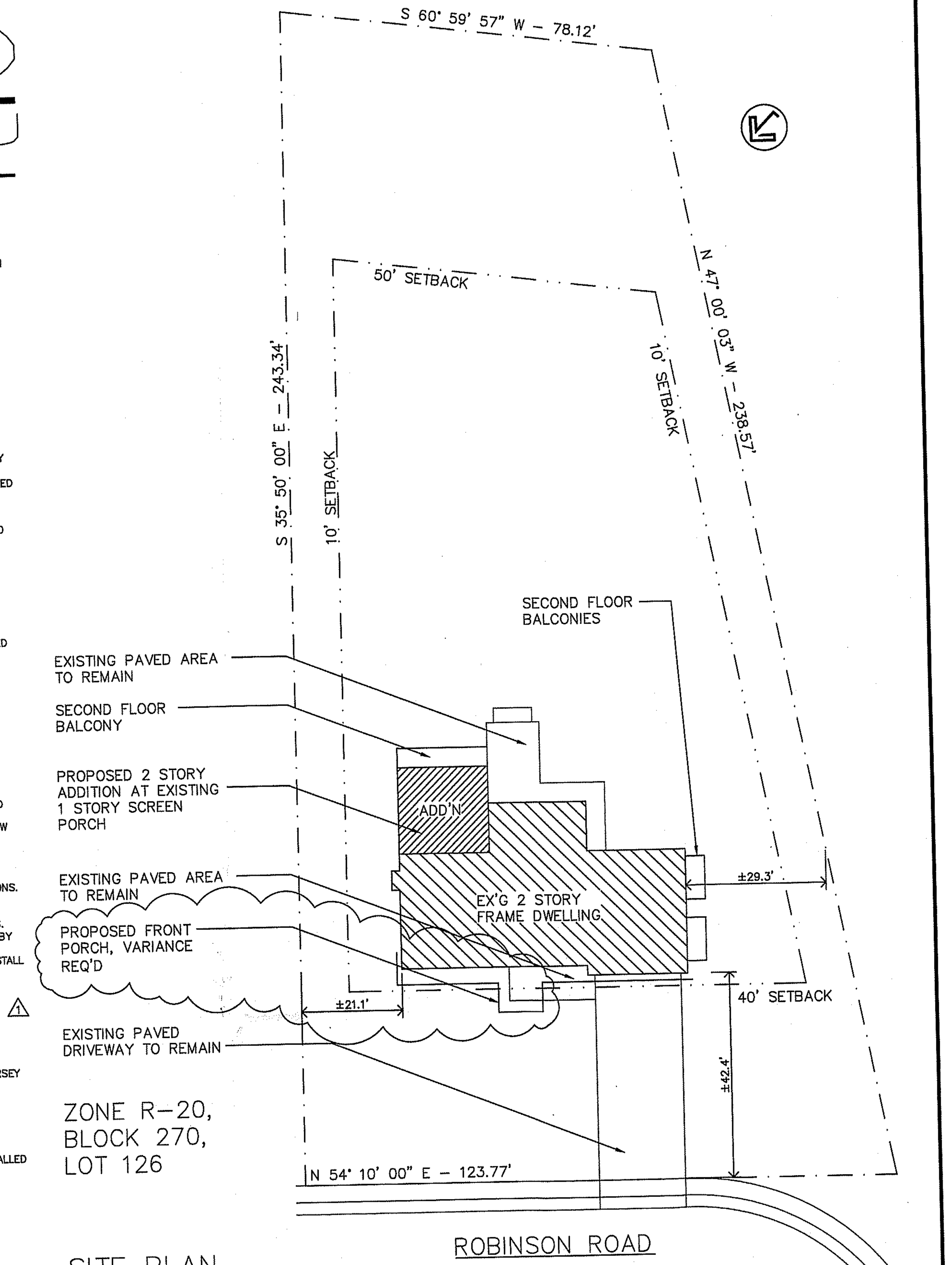


## SITE PLAN

SCALE: 1" = 20'-0"
NOTE: SITE INFORMATION OBTAINED FROM SURVEY PROVIDED BY THE OWNER, PREPARED BY MORGAN ENGINEERING & SURVEYING, LICENSE 34500, TOMS RIVER, NJ, DATED 8-25-19. ARCHITECT DOES NOT CERTIFY.

## SITE INFORMATION

| ITEM | PERMITTED/REQUIRED | EXISTING | PROPOSED |
|---|---|---|---|
| MIN. LOT AREA: | 20,000 SQ FT | 23,927 SQ FT | NO CHANGE |
| MIN. LOT WIDTH & FRONTAGE: | 100 FT | 123.77 FT | NO CHANGE |
| MIN. LOT DEPTH: | 150 FT | 243.34 FT | NO CHANGE |
| MIN. FRONT SETBACK: | 40 FT | ±42.4 FT | NO CHANGE |
| △1 FRONT SETBACK, PROPOSED FRONT PORCH: | 40 FT | ±42.4 FT | ±35.2 FT * |
| MIN. REAR SETBACK: | 50 FT | ±147.8 FT | NO CHANGE |
| MIN. SIDE SETBACKS (EACH): | 10 FT | NORTH: ±21.1 FT | NO CHANGE |
| | | SOUTH ±15.4 FT | NO CHANGE |
| MAX. LOT COVERAGE, BUILDINGS & STRUCTURES: | 28% 6,699 SF | 8.4% 2,022 SQ FT | NO CHANGE |

△1 * PROPOSED NON-CONFORMING ITEM REQUIRING VARIANCE

© 2019 THOMAS GIEGERICH ARCHITECT, LLC. This design is the property of thomas giegerich architect, llc and shall not be copied, used, transferred, sold, etc. without the written permision of the architect.

**Thomas Giegerich Architect, LLC**
Registered Architect
N. J. License #08186
128 Howell Ave.,
Fords, NJ 08863
phone/fax: 732 636 8828
email: gieg@comcast.net

ADDITION & ALTERATIONS @
EXISTING 2 STORY 1 FAMILY RESIDENCE
17 ROBINSON ROAD
MORGANVILLE, NJ 07751
BLOCK 270, LOT 126

revisions: △1 14 DEC 2019 VARIANCE FOR FRONT PORCH

| scale: | date: |
|---|---|
| AS NOTED | 28 AUG 2019 |
| dwn: TAG | comm. no. 2019-26 |

dwg. title: SPECIFICATIONS, SITE PLAN

dwg. no. A-1

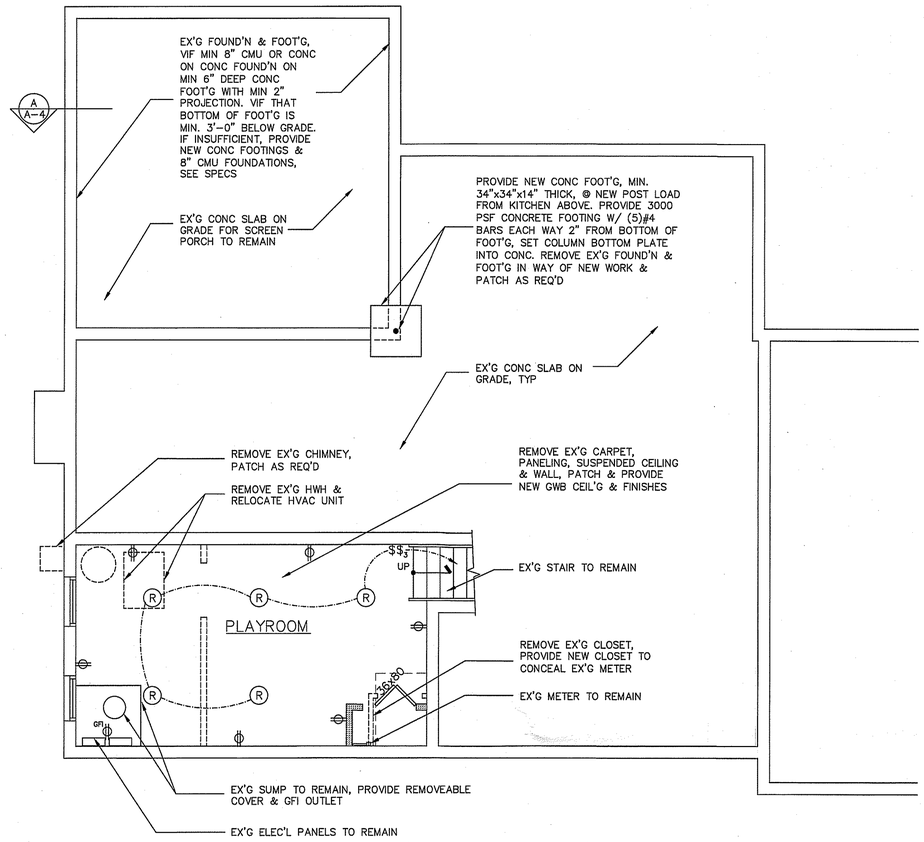


## BASEMENT PLAN

SCALE: 1/4" = 1'-0"

| | DRAWING LIST |
|---|---|
| A-1 | SPECIFICATIONS, SITE PLAN |
| A-2 | BASEMENT & FIRST FLOOR PLANS, LEGENDS, MISC INFO |
| A-3 | ROOF & SECOND FLOOR PLAN, FRAMING LEGEND |
| A-4 | ELEVATIONS, SECTION A-A |
| A-5 | ELEVATIONS, DETAILS |
| | |
| | |
| | |

| BUILDING DATA | | |
|---|---|---|
| BLDG. CODES: | 2015 IRC, SEE SPECS, DIV. 1 FIRST NOTE | |
| USE GROUP: | R-5 | |
| CONSTRUCTION CLASS: | TYPE VB COMBUSTIBLE UNPROTECTED | |
| AREA (GROSS) AND VOLUME CALCULATIONS FOR ADDITIONS: | | |
| | AREAS IN SQUARE FEET: | VOLUME IN CUBIC FEET |
| FIRST FLOOR | 337 | 3,454 |
| SECOND FLOOR | 603 | 5,680 |
| | | |

### ELEC'L LEGEND

- DUPLEX RECEPTACLE
- DUPLEX RECEPTACLE PROTECTED BY GROUND FAULT INTERRUPTER CIRCUIT
- WEATHER PROOF DUPLEX RECEPTACLE
- JUNCTION BOX FOR APPLIANCE/EQPT
- 1 WAY/2 POLE SWITCH
- 2 WAY/3 POLE SWITCH
- WALL MOUNTED LIGHT FIXTURE
- RECESSED FIXTURE
- RECESSED CLOSET LIGHT W/ ENCLOSED LAMP
- EXHAUST FAN/ LIGHT, DUCT FAN TO EXTERIOR
- WATERPROOF SHOWER OR EXTERIOR FIXTURE
- TO LIGHT/SWITCH ABOVE/BELOW
- SURFACE MTD UTILITY LIGHT, OWNER TO SELECT
- SMOKE DETECTOR
- CARBON MONOXIDE DETECTOR WITH BATTERY
- HEAT DETECTOR
- CEILING FAN

### LEGEND

- TYP NOMINAL 6" EXTERIOR WALLS: 2x6 WOOD STUDS @ 16" O/C, W/ 1/2" GWB INTERIOR FINISH, & SHEATHING & SIDING EXTERIOR FINISH.
- TYP NOMINAL 4" INTERIOR WALLS: 2x4 WOOD STUDS @ 16" O/C, W/ 1/2" GWB FINISH
- EXISTING TO REMAIN
- EXISTING TO BE REMOVED, TYPICAL
- TYP NEW DOOR — SIZE OF NEW DOOR IN INCHES 'L' = LOUVERED DOOR
- BLDG SECTION/DETAIL

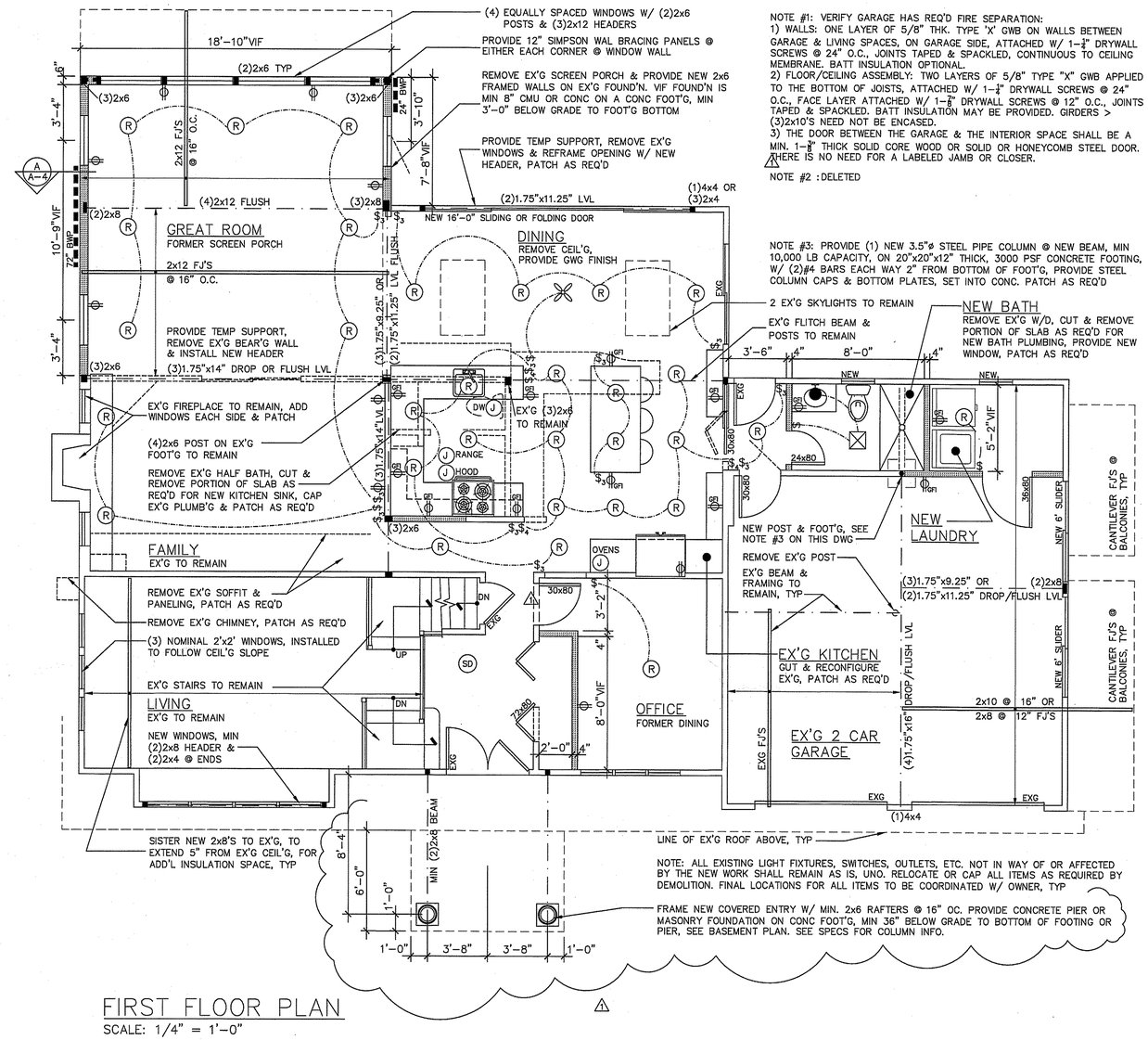


NOTE #1: VERIFY GARAGE HAS REQ'D FIRE SEPARATION:
1) WALLS: ONE LAYER OF 5/8" THK. TYPE 'X' GWB ON WALLS BETWEEN GARAGE & LIVING SPACES, ON GARAGE SIDE, ATTACHED W/ 1-$\frac{3}{4}$" DRYWALL SCREWS @ 24" O.C., JOINTS TAPED & SPACKLED, CONTINUOUS TO CEILING MEMBRANE. BATT INSULATION OPTIONAL.
2) FLOOR/CEILING ASSEMBLY: TWO LAYERS OF 5/8" TYPE "X" GWB APPLIED TO THE BOTTOM OF JOISTS, ATTACHED W/ 1-$\frac{1}{4}$" DRYWALL SCREWS @ 24" O.C., FACE LAYER ATTACHED W/ 1-$\frac{7}{8}$" DRYWALL SCREWS @ 12" O.C., JOINTS TAPED & SPACKLED. BATT INSULATION MAY BE PROVIDED. GIRDERS > (3)2x10'S NEED NOT BE ENCASED.
3) THE DOOR BETWEEN THE GARAGE & THE INTERIOR SPACE SHALL BE A MIN. 1-$\frac{3}{8}$" THICK SOLID CORE WOOD OR SOLID OR HONEYCOMB STEEL DOOR. THERE IS NO NEED FOR A LABELED JAMB OR CLOSER.

NOTE #2 : DELETED

NOTE #3: PROVIDE (1) NEW 3.5"ø STEEL PIPE COLUMN @ NEW BEAM, MIN 10,000 LB CAPACITY, ON 20"x20"x12" THICK, 3000 PSF CONCRETE FOOTING, W/ (2)#4 BARS EACH WAY 2" FROM BOTTOM OF FOOT'G, PROVIDE STEEL COLUMN CAPS & BOTTOM PLATES, SET INTO CONC. PATCH AS REQ'D

NOTE: ALL EXISTING LIGHT FIXTURES, SWITCHES, OUTLETS, ETC. NOT IN WAY OF OR AFFECTED BY THE NEW WORK SHALL REMAIN AS IS, UNO. RELOCATE OR CAP ALL ITEMS AS REQUIRED BY DEMOLITION. FINAL LOCATIONS FOR ALL ITEMS TO BE COORDINATED W/ OWNER, TYP

## FIRST FLOOR PLAN

SCALE: 1/4" = 1'-0"

© 2019 THOMAS GIEGERICH ARCHITECT, LLC. This design is the property of thomas giegerich architect, llc and shall not be copied, used, transferred, sold, etc. without the written permision of the architect.

**Thomas Giegerich Architect, LLC**
Registered Architect
N. J. License #08186
128 Howell Ave.,
Fords, NJ 08863
phone/fax: 732 636 8828
email: gieg@comcast.net

ADDITION & ALTERATIONS @

EXISTING 2 STORY 1 FAMILY RESIDENCE

17 ROBINSON ROAD
MORGANVILLE, NJ 07751

BLOCK 270, LOT 126

| revisions | |
|---|---|
| 1 14 DEC 2019 | VARIANCE FOR FRONT PORCH |
| scale: AS NOTED | date: 28 AUG 2019 |
| dwn: TAG | comm. no. 2019-26 |

dwg. title: BASEMENT & FIRST FLOOR PLANS, LEGENDS, MISC INFO

dwg. no. A-2

OF 5

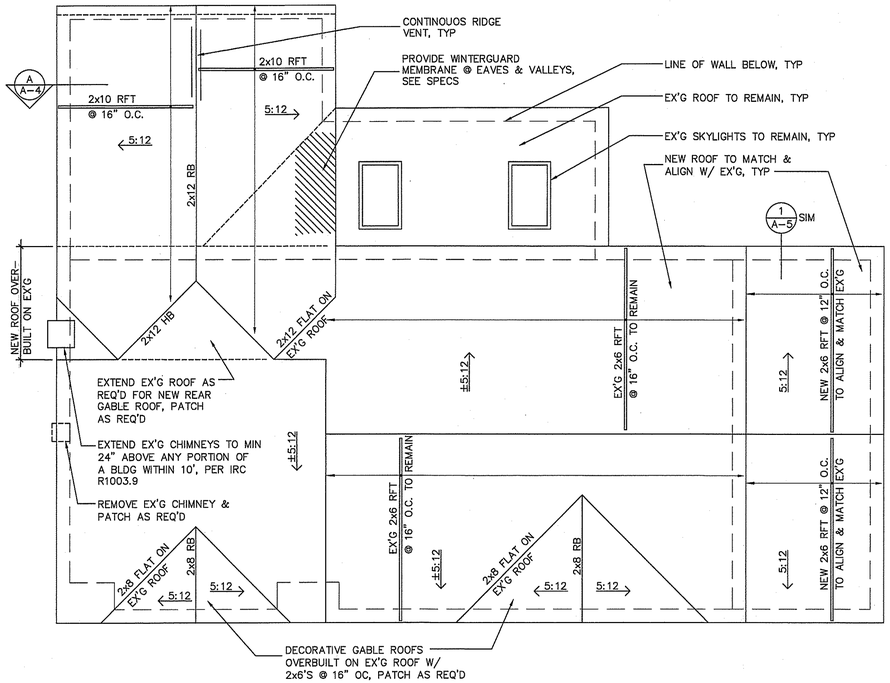


## ROOF PLAN

SCALE: 3/16" = 1'-0"

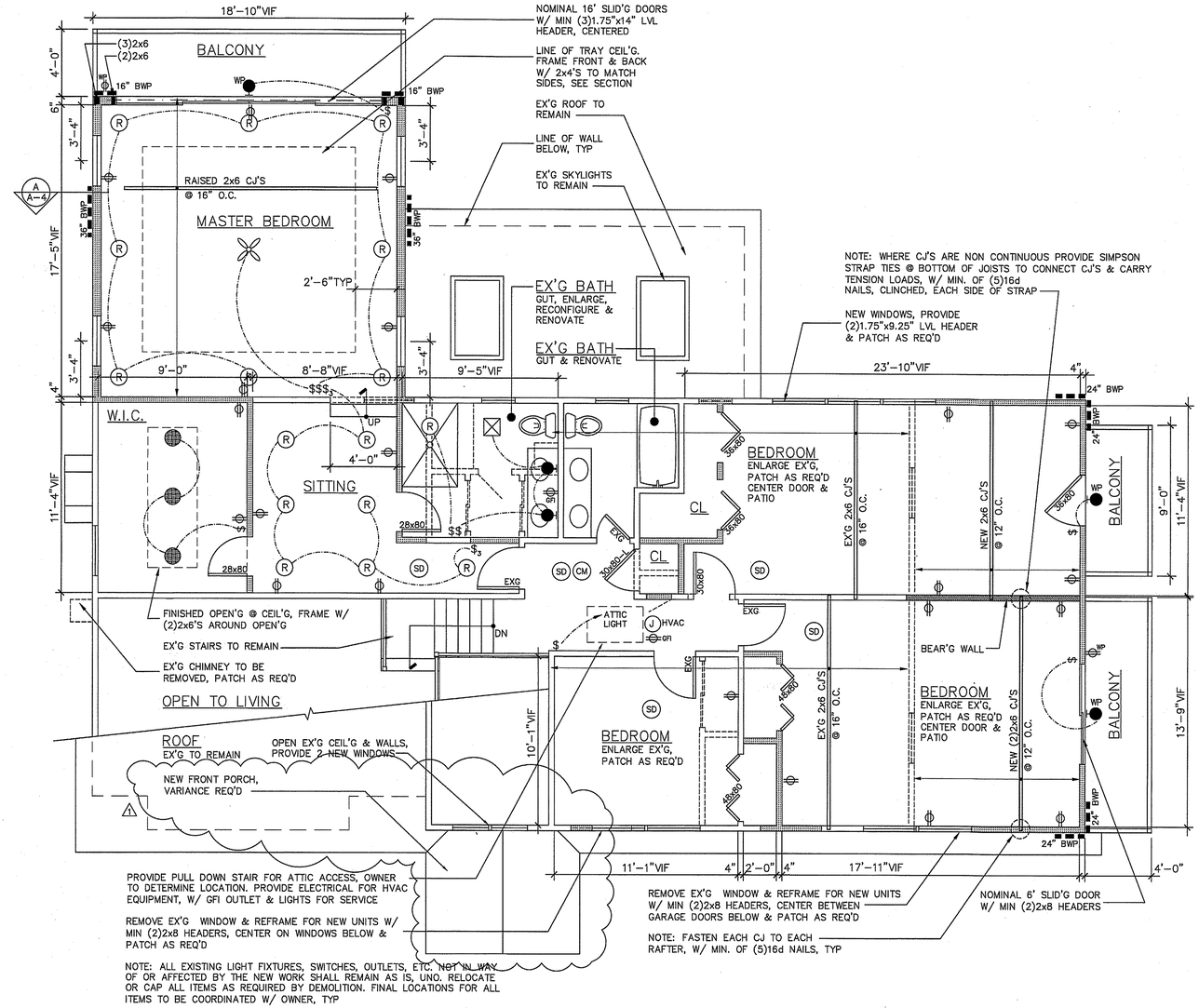


## SECOND FLOOR PLAN

SCALE: 1/4" = 1'-0"

| FRAMING LEGEND | |
|---|---|
| CJ | CEILING JOISTS |
| FJ | FLOOR JOISTS |
| HB | HIP BEAM |
| OC | ON CENTER |
| RFT | RAFTERS |
| UNO | UNLESS NOTED OTHERWISE |
| VIF | VERIFY IN FIELD |
| ■ | POST DOWN (SUPPORTING STRUCT'L MEMBER), (2)2x4'S, UNO |
| ● | STEEL PIPE COLUMN & REINFORCED CONCRETE FOOTING |
| LVL | 'MICROLLAM' LAMINATED VENEER LUMBER BEAM, PER SPECS |
| —·—·— | BEAM, JOIST OR FRAMING MEMBER |
| ▬▬▬ | 2x4 @ 16" OC WOOD STUD BEARING WALL WITH ½" GWB EACH SIDE UNO |
| 2x10 @ 16" O/C | JOIST OR RAFTER & SPAN DIRECTION |
| 4'BWP | BRACED WALL PANEL LOCATION & MIN. WIDTH IN FEET, PER SPECS & IRC TABLE R602.10.3(1) |

| STRUCTURAL DESIGN LOADS | |
|---|---|
| ROOF: | |
| LIVE LOAD | 30 PSF |
| DEAD LOAD | 10 PSF |
| ATTIC: | |
| LIVE LOAD | 20 PSF |
| DEAD LOAD | 15 PSF |
| LIVING AREAS: | |
| LIVE LOAD | 40 PSF |
| DEAD LOAD | 15 PSF |
| SLEEPING AREAS: | |
| LIVE LOAD | 30 PSF |
| DEAD LOAD | 15 PSF |
| BALCONIES | |
| LIVE LOAD | 60 PSF |
| DEAD LOAD | 15 PSF |
| WIND LOADS | |
| ULTIMATE DESIGN WIND SPEED (3 SECOND GUST) | 105 MPH |
| NOMINAL DESIGN WIND SPEED | 90 MPH |
| EXPOSURE CATEGORY | 'B' |
| RISK CATEGORY | 2 |
| DESIGN CRITERIA TO COMPLY WITH 2001 W.F.C.M. | |

## FRAMING NOTES

DEFAULT HEADERS: TO BE (2)2x8 FOR 36" OR LESS OPENINGS & (2)2x10 FOR 36" TO 72" OPENINGS, UNO

ALL BRACED WALL PANELS IN EXTERIOR WALLS SHALL BE CONSTRUCTED IN ACCORDANCE W/ IRC 2015, SECTION R602.10, CONTINUOUS SHEATHING METHOD CS-WSP. PANELS SHALL BE 1/2" THICK WOOD STRUCTURAL PANEL SHEATHING (PLYWOOD OR OSB), FASTENED W/ 6" O.C. 6d NAIL SPACING @ PANEL EDGES. SEE R602.3(1) FASTENER SCHEDULE FOR ALL OTHER FASTENER REQUIREMENTS

© 2019 THOMAS GIEGERICH ARCHITECT, LLC. This design is the property of thomas giegerich architect, llc and shall not be copied, used, transferred, sold, etc. without the written permision of the architect.

**Thomas Giegerich Architect, LLC**
Registered Architect
N. J. License #08186
128 Howell Ave.,
Fords, NJ 08863
phone/fax: 732 636 8828
email: gieg@comcast.net

ADDITION & ALTERATIONS @

EXISTING 2 STORY 1 FAMILY RESIDENCE

17 ROBINSON ROAD
MORGANVILLE, NJ 07751

BLOCK 270, LOT 126

| revisions | |
|---|---|
| 1 14 DEC 2019 | VARIANCE FOR FRONT PORCH |
| scale: AS NOTED | date: 28 AUG 2019 |
| dwn: TAG | comm. no. 2019-26 |

dwg. title

ROOF & SECOND FLOOR PLANS, FRAMING LEGEND

dwg. no.

A-3

OF 5

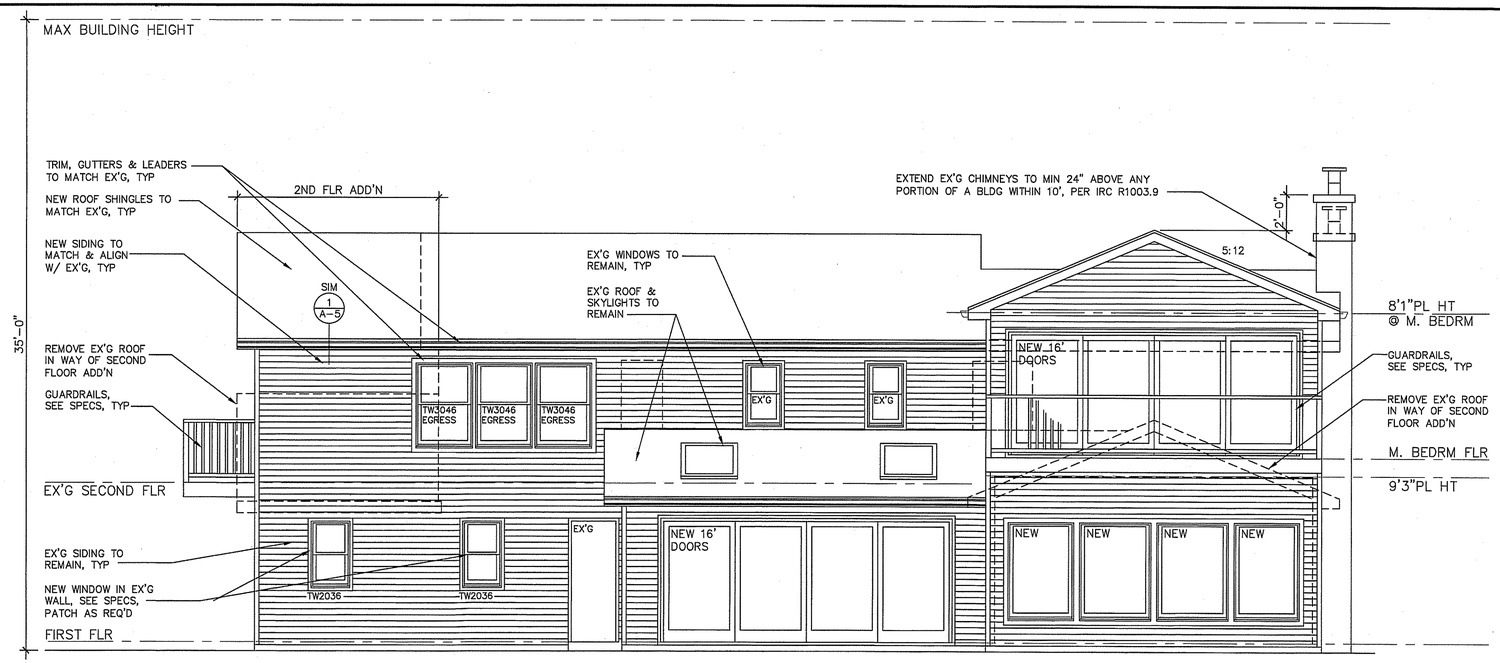


## REAR ELEVATION

SCALE: 1/4" = 1'-0"

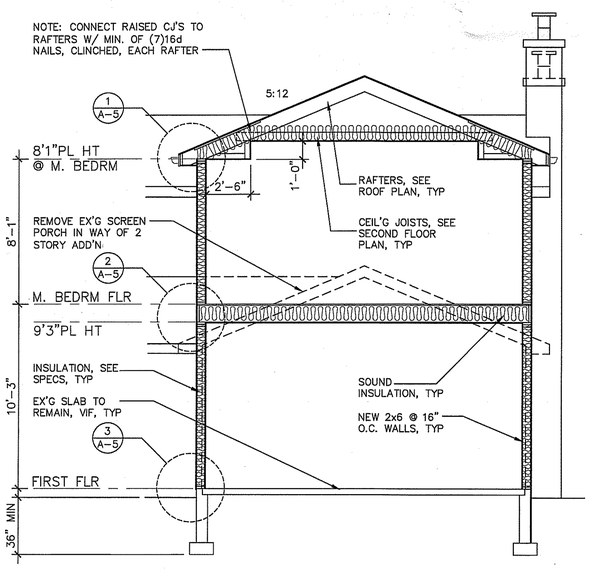


## SECTION A–A

SCALE: 1/4" = 1'-0"

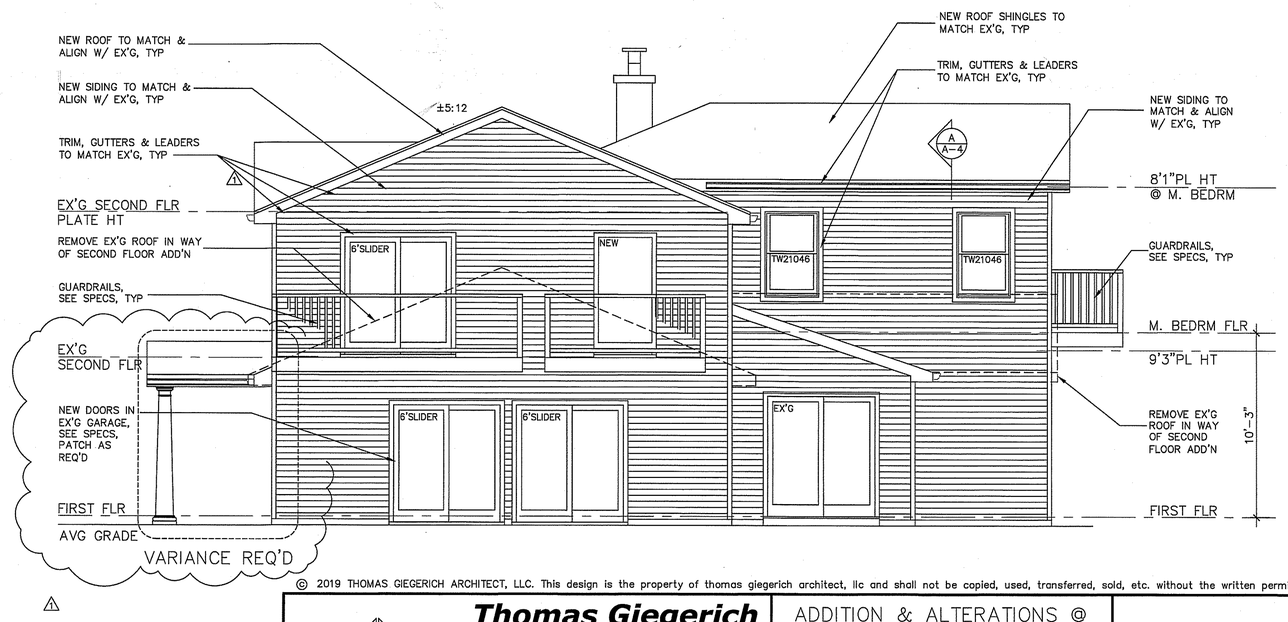


## GARAGE SIDE ELEVATION

SCALE: 1/4" = 1'-0"

© 2019 THOMAS GIEGERICH ARCHITECT, LLC. This design is the property of thomas giegerich architect, llc and shall not be copied, used, transferred, sold, etc. without the written permision of the architect.

**Thomas Giegerich Architect, LLC**
Registered Architect
N. J. License #08186
128 Howell Ave.,
Fords, NJ 08863
phone/fax: 732 636 8828
email: gieg@comcast.net

ADDITION & ALTERATIONS @

EXISTING 2 STORY 1 FAMILY RESIDENCE

17 ROBINSON ROAD
MORGANVILLE, NJ 07751

BLOCK 270, LOT 126

1 14 DEC 2019 VARIANCE FOR FRONT PORCH

revisions

| scale: | date: |
|---|---|
| AS NOTED | 28 AUG 2019 |
| dwn: TAG | comm. no. 2019–26 |

dwg. title

ELEVATIONS, SECTION A–A

dwg. no.

A–4

OF 5

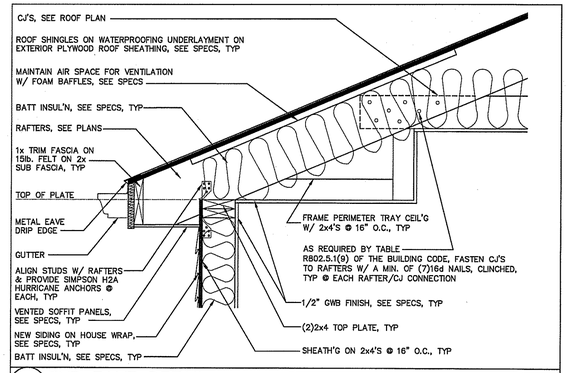


1 TYP EAVE DETAIL

SCALE: 1" = 1'-0"

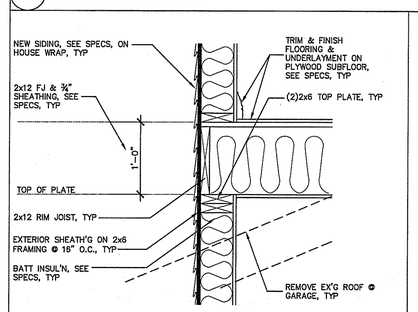


2 TYP FLOOR DETAIL

SCALE: 1" = 1'-0"

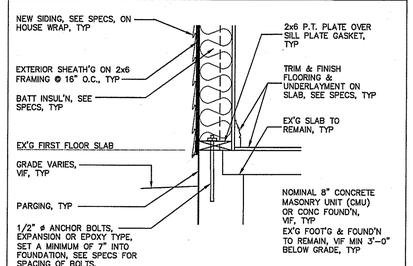


3 TYP FLOOR DETAIL

SCALE: 1" = 1'-0"

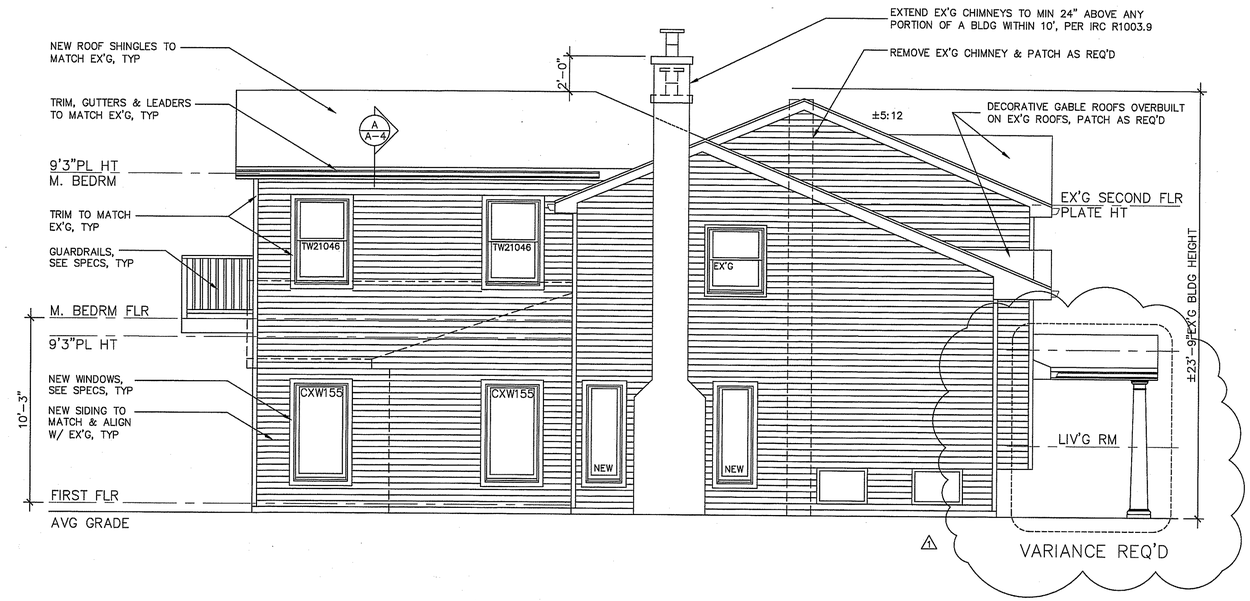


SIDE ELEVATION

SCALE: 1/4" = 1'-0"

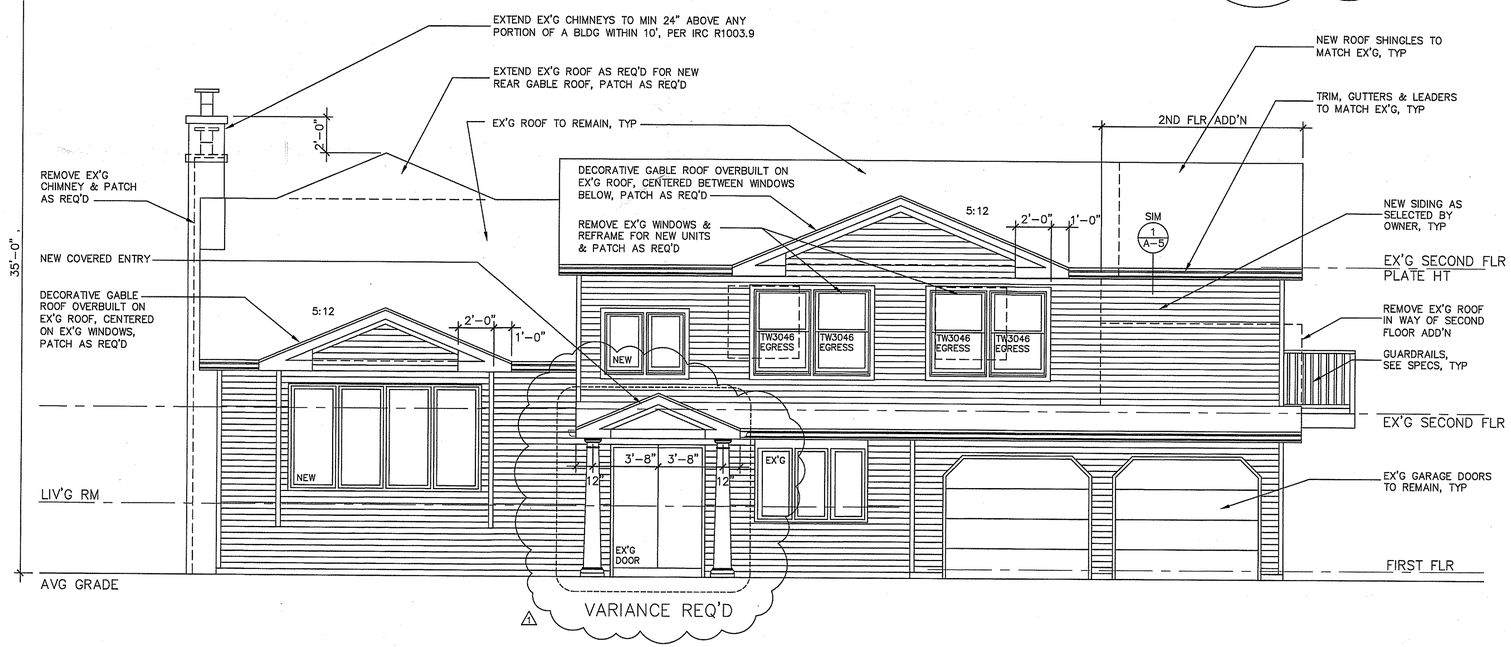


FRONT ELEVATION

SCALE: 1/4" = 1'-0"

© 2019 THOMAS GIEGERICH ARCHITECT, LLC. This design is the property of thomas giegerich architect, llc and shall not be copied, used, transferred, sold, etc. without the written permision of the architect.

**Thomas Giegerich Architect, LLC**
Registered Architect
N. J. License #08186
128 Howell Ave.,
Fords, NJ 08863
phone/fax: 732 636 8828
email: gieg@comcast.net

ADDITION & ALTERATIONS @

EXISTING 2 STORY 1 FAMILY RESIDENCE

17 ROBINSON ROAD
MORGANVILLE, NJ 07751

BLOCK 270, LOT 126

| revisions | |
|---|---|
| 1 14 DEC 2019 | VARIANCE FOR FRONT PORCH |
| scale: AS NOTED | date: 28 AUG 2019 |
| dwn: TAG | comm. no. 2019-26 |

dwg. title

ELEVATIONS, DETAILS

dwg. no.

A-5

OF 5